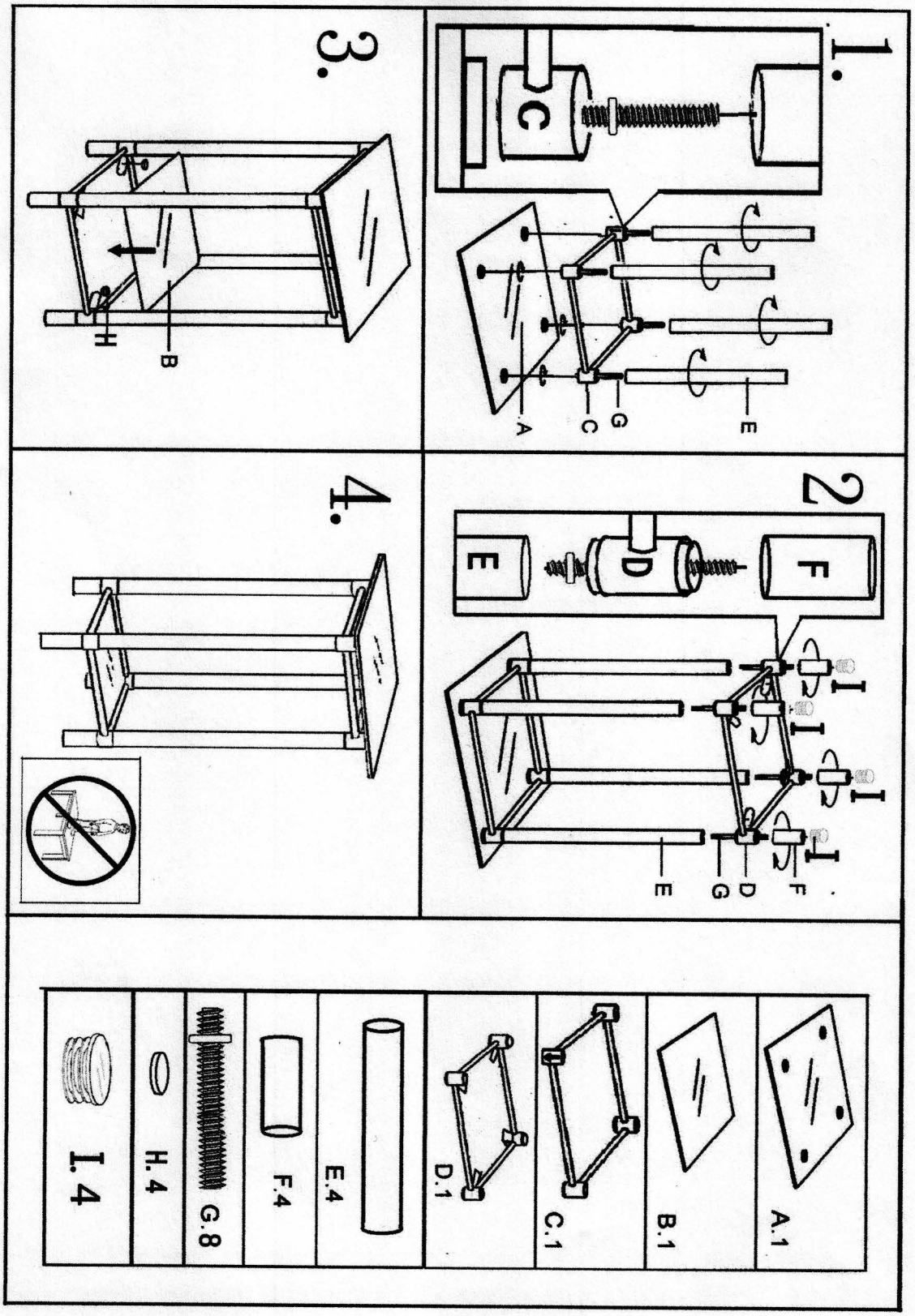42772 (EK10172) 6401